Amish Country Spas

AMISH COUNTRY INCORPORATED
P.O. BOX 557 • YORK, PA 17405-0557
717/767-6765

WS-181

Litho in USA 9/87 7/88

Amish Country Spas

Building a Tradition of Quality

OWNER'S MANUAL

CONVERTIBLE 120/240V SUPPORT SYSTEMS FOR MOVEABLE AND PORTABLE AMISH COUNTRY SPAS

THIS IS AN IMPORTANT SAFETY DOCUMENT

- Keep it in a safe place.
- Pass it on to any new owner.
- If lost, contact your local Amish Country dealer or write to Amish Country Incorporated and new copy will be provided at no charge.

This symbol on the product's nameplate means it is Listed by UNDERWRITERS LABORATORIES, INC.

SAVE THESE INSTRUCTIONS

It is important that you take a few minutes to read this manual. A complete knowledge of the basic safety precautions and proper maintenance procedures will provide years of safe and pleasant enjoyment of your Amish Country Spa.

(Please note that, in some cases, failure to follow these instructions may result in damage that may not be covered by your warranty or may void the warranty entirely.)

SERIAL NUMBER LOCATION

On Amish Country spas, the serial number is engraved directly above the filter cannister area (see picture). On those models which are listed by Underwriters Laboratories (U.L.), you will also find the serial number engraved on the foil tag attached to the equipment bay door.

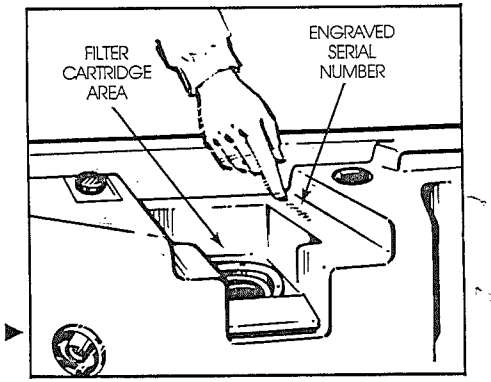

PERMANENT SPA INSTALLATIONS

Because outdoor or sunken spa installations are usually permanent, the installation may require special considerations. It is important that you consult with your Amish Country Spa dealer.

Please fill out for future reference.

AMISH COUNTRY SPA MODEL _____

SERIAL NUMBER _____

CAPACITY (GALLONS) _____

MEMBER

NATIONAL SPA & POOL INSTITUTE

This symbol on the product's nameplate means it is Listed by UNDERWRITERS LABORATORIES, INC.

COPYRIGHT © 1987 AMISH COUNTRY INCORPORATED
YORK, PENNSYLVANIA 17405
Printed in U.S.A.

Cross Reference
Throughout this manual, bold face numbers are used to identify various paragraphs. These numbers may be used throughout the manual to help you cross reference related information.

SAFETY PRECAUTIONS.

The following spa use rules are most important. Using your spa properly and safely will give you countless hours of enjoyment and pleasure. But, just as with many products today, misuse can be extremely harmful. Protect yourself, your family and your guests by following the safety rules listed below:

1. Do not drink alcoholic beverages before or during spa use. One of the effects of alcohol is slowed reflexes and it can make people drowsy. Jetted hot water also helps induce muscle relaxation. The two together could induce sleep and this, in turn, could possibly lead to drowning. Because of these facts, it is vitally important that you do NOT allow the mixing of alcoholic beverages with a spa usage.

2. Pregnant women and people under medical care (for such problems as heart disease, diabetes, blood pressure or circulatory problems) must consult their physician prior to using the spa. Some medications can induce drowsiness. Never use the spa when taking anticoagulants, antihistimines, vasoconstrictors, vasodilators, stimulants, hypnotics, narcotics or tranquilizers. In all cases, if you are not thoroughly familiar with the medication you are taking, check with your doctor prior to using the spa.

3. Spa water temperatures should be maintained in the 98 to 104° range. An accurate underwater thermometer is a "must". 100° water is generally safe and enjoyable for most adults. However, remaining in 100° water for an extended period will raise your body temperature to this level and you may experience some discomfort. As a general rule, when you raise the temperature of the spa water, you should reduce the amount of time you soak. Twenty minutes is about the limit for 102° water; limit your soaking to 10 minutes above 102°. Never soak in water hotter than 104° because temperatures above this level may raise your body temperature to a level that could cause drowsiness, fainting, hyperthermia or heat stroke. (Symptoms of hyperthermia are: muscle incoordination and cramps, nausea, rapid heartbeat, pale skin and delirium.) It is always important to check your in-spa thermometer before using your spa and to limit your time in the spa as suggested above. Use 98 to 99° – normal body temperature – for extended periods of soaking.

4. People with infections, skin sores or open wounds should not use the spa. Warm or hot water may serve as a "breeding ground" for some types of bacteria. It is vitally important to keep your spa properly disinfected with chlorine or other equally effective disinfectants.

5. It is recommended that people shower before and after using the spa. Showering before removes deodorants, lotions, perspiration and oils which may clog the filter. Showering after soaking will help remove any bacteria that may be in a spa that is not fully disinfected.

6. NEVER allow children to use the spa without adult supervision.

7. Adults should not use the spa without someone nearby who can be called should anything unexpected occur. As an added precaution, you may want to post emergency phone numbers near your phone so that they are handy should a need arise.

8. Always use unbreakable containers around the spa; never use glass.

9. Always use caution when entering and exiting the spa. Wet surfaces can be slippery and may cause a fall. Hand rails and non-skid surfaces are recommended.

10. Suction through drains and skimmers can be powerful. Any drain or skimmer with a damaged cover can be dangerous, especially to small children or adults with long hair. Should any part of the body become drawn to drain or skimmer, turn off the spa immediately. Long hair should be restrained in a bathing cap; never allow long hair to float in the spa. Always replace broken drain outlet cover immediately.

11. Keep electrical appliances, including telephones, away from the spa to avoid a possible shock hazard. Do not try to adjust or touch the spa equipment such as the pump, heater or any other electrical appliance while you are in the spa.

12. Never walk, climb, play or jump on the Energy Cover of your spa. Never swim or play under this cover when it is installed on the spa. Also, do NOT rely on your Energy Cover as a safety cover for children. It is a precautionary measure only and children must be supervised when they are in or around the spa.

13. A fence around your spa with a self-latching gate can be the best protection against unauthorized entry and use. If your spa is indoors, lock the door to the room to keep out unauthorized users.

A WORD ABOUT CHILDREN

As previously explained, soaking hot water will affect the body's temperature. In small children, the body temperature can increase more quickly than with a full-grown adult. Thus, children are unable to absorb the same amount of heat. Therefore, children's time in the spa should be less than an adult's, and children using a spa must be constantly supervised. Children should never be allowed to swim underwater.

A WORD ABOUT PREGNANT WOMEN

Soaking for extended periods in water 102° or higher may affect body temperature to the point that it could affect the fetus. This is especially important during the first 90 days of pregnancy. Spa use at 102° should be limited to no more than 15 minutes. It is strongly suggested that women who are pregnant (or those who are considering becoming pregnant in the near future) check with their doctor on his recommendation for safe spa use.

A WORD ABOUT PHYSICAL FITNESS

If you intend to use a spa in conjunction with strenuous exercise, it is strongly recommended that you consult your physician on proper spa usage.

INDEX

SERIAL NUMBER LOCATION (PAGE 2)

SAFETY PRECAUTIONS (PAGE 3-4)
IMPORTANT SAFETY INSTRUCTIONS (PAGE 5-7)
Grounding & Wiring (#1-6, 41-46)
GFCI Testing (#7-9)
Chemical Safety (#15, 38-40)
Door Safety System (#16)

INSTALLATION & USE (PAGE 8-15)
Location (#18)
Shut-Off Valves (#19)
Heater High Limit Switch (#20-21)
System Circuit Breaker (#22)
System Switch (#23)
Timeclock Operation (#24)
Adjusting the Timeclock (#25)
Filtering Timeclock (#26)
Filtering Bypass Switch (#27)
Heating Timeclock (#28)
Heater Bypass Switch (#29)
Air Control Valves (#30)
Hydrojets (#31)
Spa AQUA-SET Controls (#32-35)
Underwater Spa Light (#36-37)
Water Chemistry Guidelines (#38-40)
Electrical Requirements (#41-46)
Conversion from 120v to 240v (#44-46)
Starting the Spa (#47-51)
How to Operate Controls (#52-63)
Hard Cover (#64)
Freeze Protection (#65)

REGULAR MAINTENANCE (PAGE 19-21)
Cedar Skirting (#66)
Draining Your Spa (#67-68)
Cleaning Your Spa (#69-70)
Filter Cartridge Removal/Cleaning (#71-72)
Refilling Spa (#73)
Replacing Spa Light Bulbs (#74)
Winterizing/Winter Use (#75-76)
SPA MAINTENANCE SCHEDULE (#77-80)

TROUBLESHOOTING (PAGE 22-24)

SUPPORT SYSTEM DIAGRAM (PAGE 25)

IMPORTANT SAFETY INSTRUCTIONS

Because spas are electrically operated, basic safety precautions should always be followed when installing and using spas.

1. READ AND FOLLOW ALL INSTRUCTIONS.

2. Turn OFF all electric power at the main circuit breaker or disconnect panel prior to performing any service to the spa equipment.

3. It is the responsibility of the spa owner to ensure that all electrical connections are made in accordance with the National Electric Code and any state or local electrical codes in effect at the time of installation.

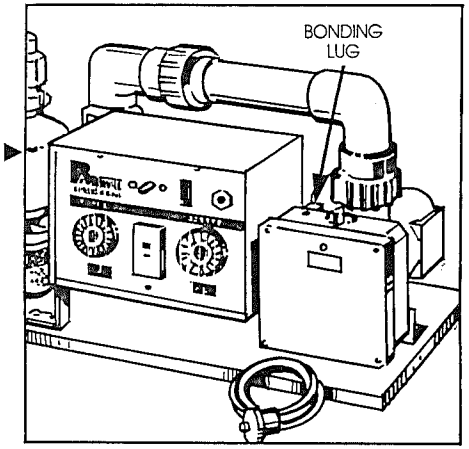

4. A bonding lug is provided on the outside of the electrical control box. The lug allows for the connection of *at least* #8 AWG solid copper bonding wire between the electrical control box and any metal ladders, metal water pipes, metal conduits or any other metal located within five feet of the spa as needed to comply with local requirements. This is to reduce the risk of electrical shock.

5. Connections should be made with copper conductors only. All conductors, circuit breakers and/or fuses must be sized in accordance to the Total Amperage Load as specified on the electrical control box data label.

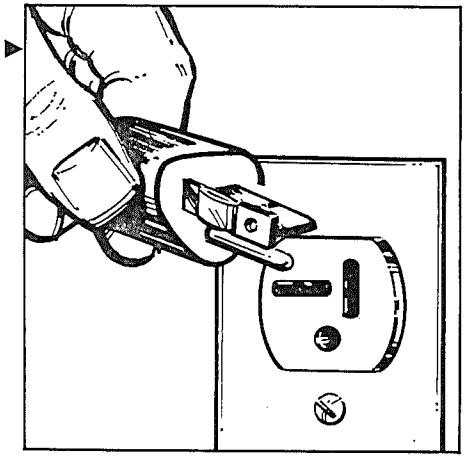

6. Connect 120 volt support systems only to a grounded grounding type receptacle. DO NOT, under any circumstances, modify the power cord in any way to fit other than a 20 amp receptacle. A power cord will be supplied for 120V systems. Do not bury cord.

WARNING: *To reduce the risk of electric shock, always replace damaged cords immediately.*

All 240 volt systems require a three wire plus ground electrical service (line 1, line 2, neutral, ground). All 240 volt connections can be made by removing the front cover of the electrical control box.

When converting to 240 volt, a green colored terminal is provided within the control box. Connect this terminal to the grounding terminal of your electrical service or supply panel with a green insulated copper wire equivalent in size to the circuit conductors supplying this equip-

ment, but no smaller than #12 AWG. A second wire connector is provided and should be bonded with at least #8 AWG copper wire to any metal ladders, metal water pipes, metal conduits or any other metal located within five feet of the spa. These steps are to reduce the risk of electric shock.

If the installation includes a common bonding grid (reinforced concrete slab for support, a ground plate beneath the spa or any metal water pipe connection), all metal ladders, drains or the like must be bonded to the common bonding grid. If a common bonding grid is not present, there must be no connection between any metal ladders, drains or the like and the equipment or the equipment grounding bus.

7. The Brett Aqualine Spa Pack System is provided with a Ground Fault Circuit Interruptor (GFCI) located on the front of the electrical control box. The GFCI is a safety device used to protect people from exposure to electric shock hazard.

8. The GFCI should be tested **before each use** in the following manner:

(A) Press and release the Test Button, located in the spa pack panel or at the end of the power cord. See spa pack owner's manual for complete instructions.

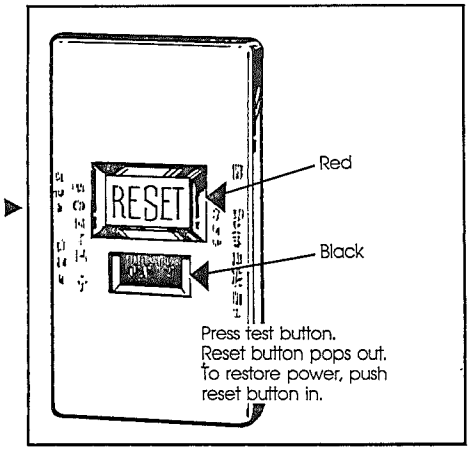

(B) The test indicator lamp should go "on," indicating that the GFI is functioning on 120 volt cord.

(C) Press and release the "reset" button to reactivate the GFCI. The indicator lamp should turn "off."

CAUTION:

Should you find that the GFCI unit does not function according to the above instructions, disconnect your spa power cord, or turn the breaker to "off" and call a qualified service man. Have this problem corrected before using your spa again.

9. The GFCI must now be reset to operate the equipment. Push the RED reset button and close the equipment bay door.

10. Install the spa to provide proper drainage and to keep water out of the electrical components.

11. Never use an extension cord. The spa must be placed near enough to the power source to prevent the need for an extension cord.

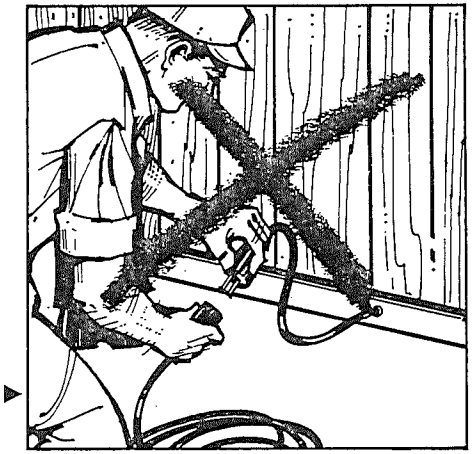

12. NEVER OPERATE THE SPA SUPPORT SYSTEM WHEN THE SPA IS EMPTY AS THIS COULD RESULT IN SEVERE DAMAGE TO THE HEATER, PUMP AND SPA SUPPORT SYSTEM.

13. Clean the filter cartridge weekly (or more often during frequent spa use) (#71) A dirty filter inhibits the water flow, thereby reducing the jet action, the efficiency of the heater, and could damage the pump seal.

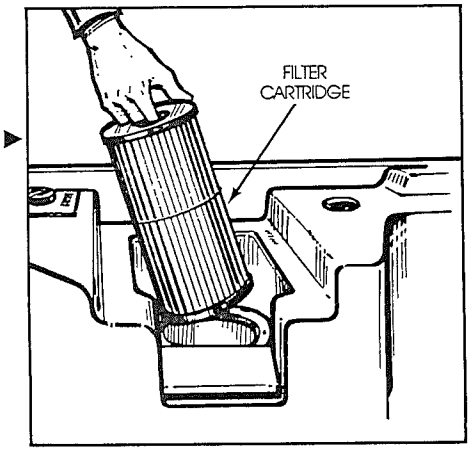

14. Do not cover your spa with any transparent cover. Clear "solar blankets" are not recommended because they can create a solar oven effect that could cause structural warping, blistering, and fading of the acrylic surface. For best results, use the Amish Country Hard Cover (#64).

CHEMICAL SAFETY

15. Add only one chemical at a time to the water. Never mix chemicals or chemical solutions together. Follow the manufacturer's instructions for dilutions and precautions. When diluting, add chemicals to water – not water to chemicals. When working with acid, avoid skin contact. ALWAYS STORE CHEMICALS OUT OF THE REACH OF CHILDREN. See #38, 39, 40.

DOOR SAFETY SYSTEM

16. Your Amish Country spa has a safety door system. When the equipment bay door is opened, or ajar, the support system will not operate. THE DOOR MUST BE CLOSED COMPLETELY FOR ANY OF THE SUPPORT SYSTEM COMPONENTS TO BE ACTIVATED.

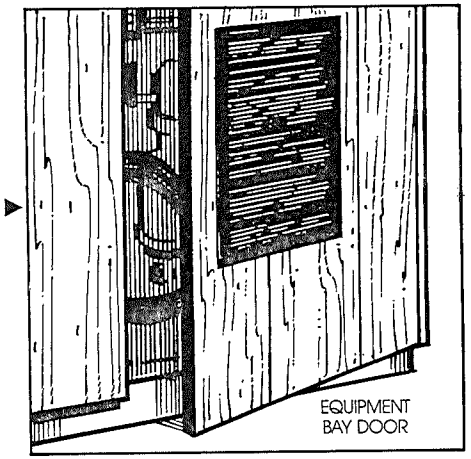

17. SAVE THESE INSTRUCTIONS

INSTALLATION AND USE

LOCATION

18. Locate the spa on a hard, flat, level surface to assure proper operation. Inground spas require special installation techniques and should be arranged through your Amish Country dealer. Improper installation can result in structural damage to the spa and a voiding of your spa warranty. Items to discuss with your dealer include local construction codes, electrical service requirements, accessibility and serviceability of equipment and components, present underground obstructions such as gas, water and telephone lines, safety measures such as fences and locks and visibility of the spa installation from the home, street and neighbors.

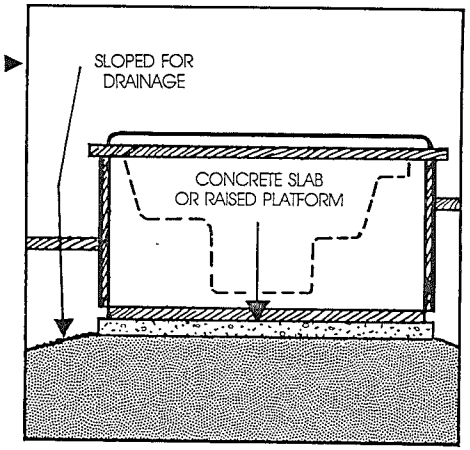

Sufficient water drainage around the spa is necessary to help preserve the wood skirt and support structure and, also, to provide adequate drainage of the equipment bay for the components.

Your installation should also permit access for servicing the equipment from above or below any decks or floors.

BEFORE filling with water, be sure the spa is in the final position. Check for and remove power cords, tools or hoses which may be entrapped underneath the spa.

CAUTION: *Never try to move a spa that has not been fully drained. To do so can result in damage to the spa and physical injury to the mover.*

SHUT-OFF VALVES

19. The spa has two SHUT-OFF VALVES that can completely shut off the water flow to the support system for dealer servicing. A new spa, or one that has recently been serviced, may have the SHUT-OFF VALVES partially closed. This can restrict the water flow and affect jet performance. Always be sure the valves are fully open with the handles fully extended.

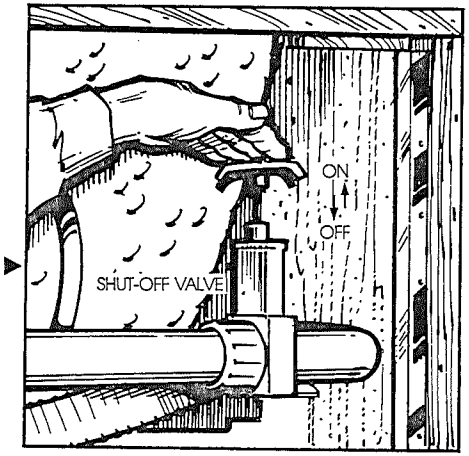

HEATER HIGH-LIMIT SWITCH

20. A built-in high limit switch will shut the heater off if the temperature within the heater assembly reaches a factory-set non-adjustable limit.

Several conditions could cause the switch to activate: low water level, shut-off valves closed while heater is on, dirty filter, restricted or clogged plumbing lines.

21. Reset the high-limit switch by pushing the "HIGH LIMIT" switch button located on the heater housing.

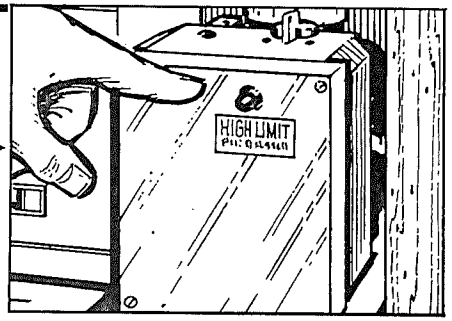

You cannot reset the switch until water temperature within the heater assembly drops to a lower, present temperature. If the switch trips repeatedly, the support system should not be operated until the problem is corrected. Please contact your Amish Country dealer.

SYSTEM CIRCUIT BREAKER

22. A Circuit Breaker, located on the front of the electrical control box, provides protection for the pump, air blower motor and control circuitry. If an electrical fault occurs within these components, the button on the circuit breaker will pop outward.

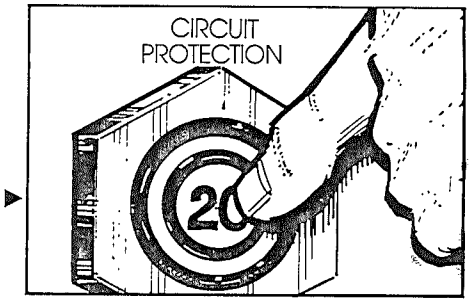

To reset, push button in. If the condition repeats, do not use the spa until the problem has been corrected. Please contact your Amish Country dealer.

SYSTEM SWITCH

23. A System Switch, located on the front of the electrical control box, prevents unauthorized spa use.

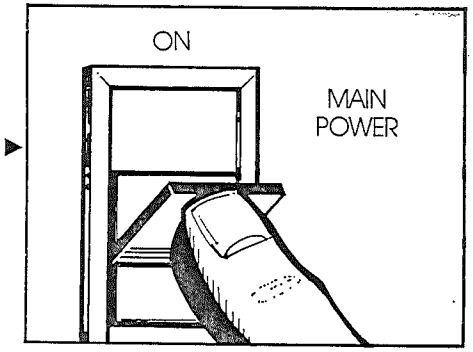

In the ON position, the equipment is controlled by the AQUA-SET Controls (#32).

In the OFF position, the AQUA-SET Controls are inoperable. (However, the Time Clocks will continue to keep the correct time.)

TIME CLOCK OPERATION (General)

24. The two time clocks, built into the electrical control box, help to assure operating convenience and economy. This means the spa water can be filtered daily or several times each day, maintaining a clear, clean condition with effective chemical distribution. The temperature of the water can be automatically controlled so that the spa is ready-to-use, either every day or evening, or only on selected days. The two time clocks operate independently of each other and may be overridden at any time without affecting the time clock settings.

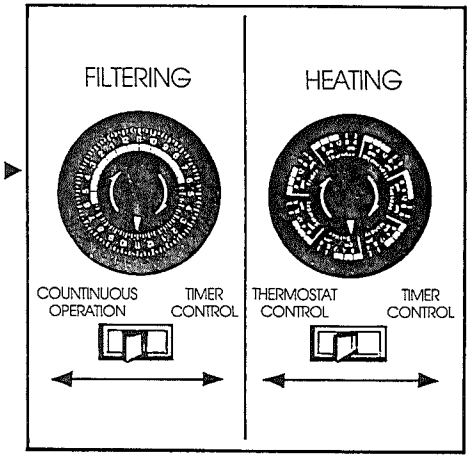

TIME CLOCK ADJUSTMENTS

25. Note: Any time the circuit breakers are shut off, or the spa power cord is removed from the outlet, the time clocks will need to be reset to the present time of day.

FILTERING TIME CLOCK

(24-Hour Operation)

26. CLOCK SET POINT: Rotate outer clock ring clockwise and set correct time of day opposite Set Point arrow.

TIME CLOCK LUGS: (Each lug represents 15 min.) Push inward toward center of clock to set ON times. Any combination of cycles is possible. The example shows ON at 11:00 a.m. and OFF at 1:30 p.m. To cancel settings, push outward on the lugs.

For an initial setting, we suggest four (4) 60-minute ON settings spaced evenly around the clock. For example, 10:00 a.m. to 11:00 a.m., 4:00 p.m. to 5:00 p.m., 10:00 p.m. to 11:00 p.m., 4:00 a.m. to 5:00 a.m. Wait a few days and adjust if necessary to maintain sparkling clear water with a minimum of ON times.

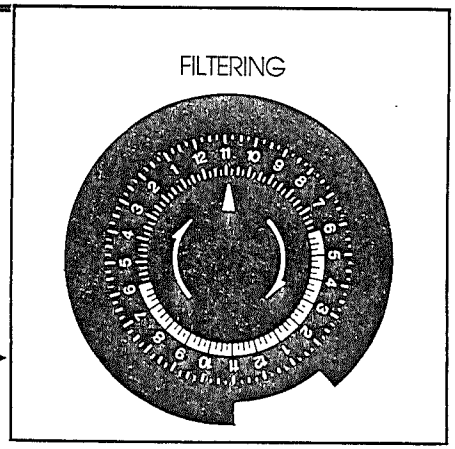

FILTERING BYPASS SWITCH

27. When set in the TIMER CONTROL position, the time clock controls filter operation and will start and stop the filtration cycle as determined by the settings of the FILTERING TIME CLOCK lugs (#26).

CONTINUOUS OPERATION position, means that the filtration cycle is continuous. This is desirable after periods of heavy usage or when adding chemicals.

The time clock settings are not disturbed when in the continuous operation mode and timed cycles will begin again when this switch is returned to the TIMER CONTROL position.

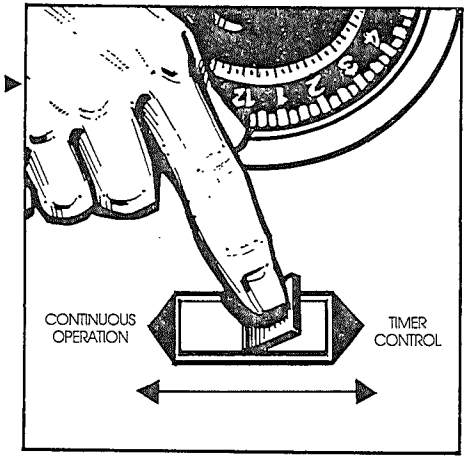

HEATING TIME CLOCK (7-Day Operation)

28. CLOCK SET POINT. Rotate outer clock ring clockwise and set correct time of day opposite Set Point arrow.

TIME CLOCK LUGS (Each lug represents a 2-hour period of a selected day of the week.) Push inward toward center of clock to set ON times. The example shows ON at 6:00 a.m. Friday and OFF at MIDNIGHT Friday. To cancel settings, push outward on the lugs.

If the thermostat is calling for heat and the time clock reaches an ON time, the PUMP will start and the HEATER will turn ON. When the water reaches the desired temperature, the thermostat will turn the HEATER and the PUMP, OFF. This cycle will continue during each ON period as determined by the setting of the time clock lugs.

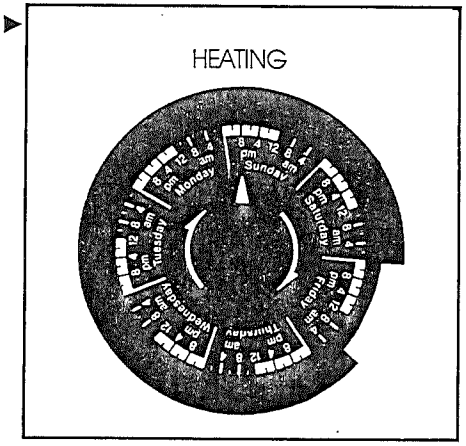

HEATER BYPASS SWITCH

29. In the TIMER CONTROL position, the time clock has control and will start and stop the heating cycle as determined by the settings of the HEATING TIME CLOCK lugs and the thermostat (#28).

In the THERMOSTAT CONTROL position, the heating cycle will be continuous, controlled only by the setting of the thermostat. The HEATER AND PUMP will start and stop as required to maintain the desired temperature. This position is ideal for freeze protection. With the thermostat set at the FREEZE position, the HEATER and PUMP will automatically cycle to maintain an appropriate 50°F water temperature.

The time clock settings are not disturbed and timed cycles will begin again when this switch is returned from THERMOSTAT CONTROL to TIMER CONTROL.

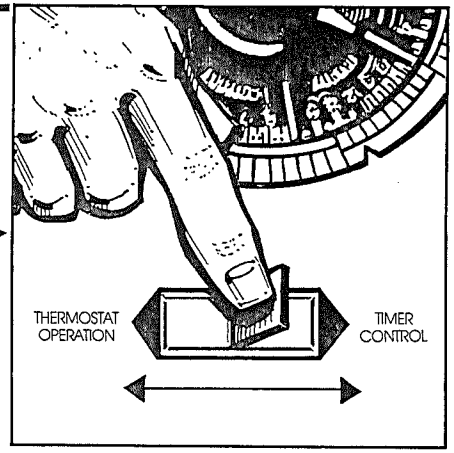

AIR CONTROL VALVES

30. The spa is equipped with two air control valves in the control center near the skimmer. These allow you to regulate the water action from the jets.

Open the air valves by turning them counterclockwise, using the high speed pump action until the desired water turbulence is obtained.

NOTE: Because heat loss occurs as air is injected into the water, close the air control valves completely when the spa is not in use. Turn controls clockwise to close.

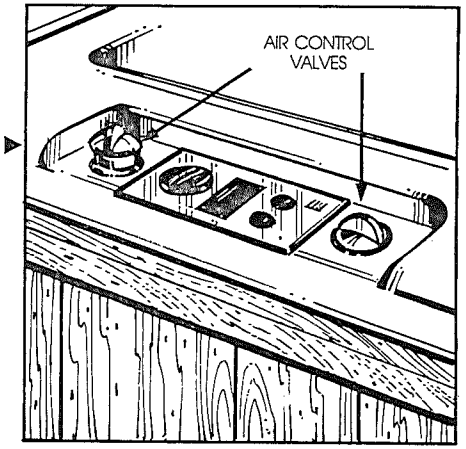

HYDRO JETS

31. Your spa is fitted with fully adjustable, directional hydro jets. The jet action can be directed 360° by aiming the swivel ball nozzle. The water flow can be regulated at each jet as follows:

- To restrict flow, twist the nozzle clockwise.
- To allow full flow, twist the nozzle counterclockwise.

If your spa is equipped with a Turbo Massage option, the control knob for this jet will be located next to the skimmer lid. By fully turning this knob in a clockwise direction you can concentrate the flow of water from the hydro jets to the Turbo Jet. To return the flow of water to the hydro jets, turn the knob 180° in a counterclockwise direction.

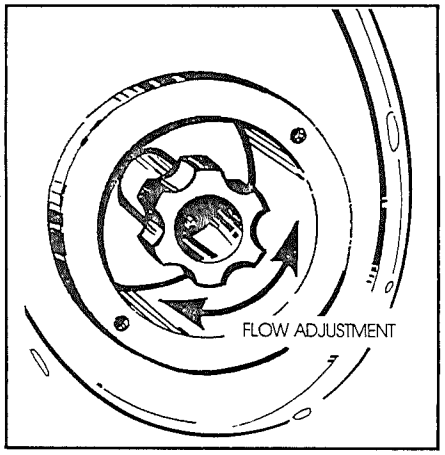

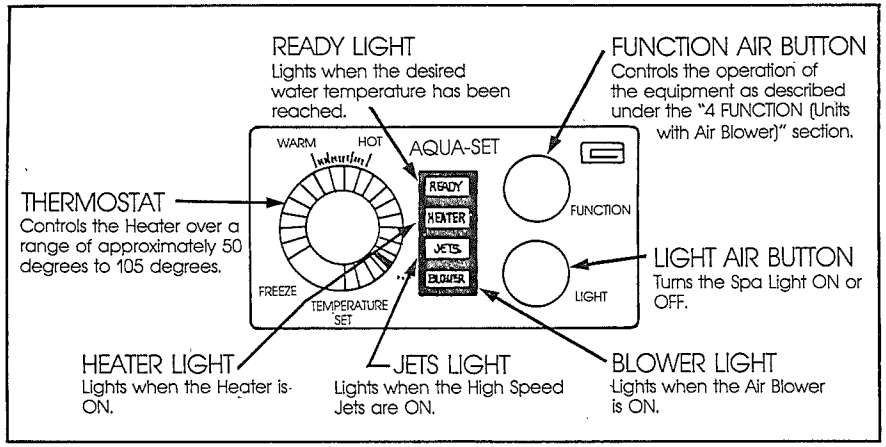

SPA AQUA-SET CONTROLS

32. With the Thermostat in the OFF position, move the Main Power Switch to the ON position. The pump and/or the Air Blower will start in one of the modes described below.

IMPORTANT NOTE: It is most important that the Pump High speed be operated for several minutes to assure that ALL air has been removed from the system. Only after full water flow has been established should the Thermostat be turned up.

4 FUNCTION (Units with Air Blowers)

33. The equipment may be operated from within the spa by depressing the air-operated control mounted on the top edge of the spa. Each time the control button is depressed, the switching mechanism will step to the next Mode in the sequence.

120 VOLT OPERATION

MODE 1 Pump runs in LOW speed for filtration and Heater will operate as determined by the thermostat setting.

MODE 2 Pump runs in HIGH speed for maximum hydrotherapy jet action and Air Blower operates. Heater will not operate.

MODE 3 Pump runs in HIGH speed for continued hydrotherapy jet action. Heater will not operate.

MODE 4 Air Blower operates alone.

240 VOLT OPERATION

MODE 1 Pump runs in LOW speed for filtration and Heater will operate as determined by thermostat setting.

MODE 2 Pump runs in HIGH speed for maximum hydrotherapy jet action. Air Blower operates and Heater will operate as determined by thermostat setting.

MODE 3 Pump runs in HIGH speed for continued hydrotherapy jet action. Heater will operate as determined by thermostat setting.

MODE 4 Air Blower operates alone.

2 FUNCTION (Units without Air Blower)

34. The operation of the 2 Function unit is similar to the 4 Function unit except that there are no Air Blower Modes.

120 VOLT OPERATION

MODE 1 Pump runs in LOW speed for filtration and Heater will operate as determined by thermostat setting.

MODE 2 Pump runs in HIGH speed for maximum hydrotherapy jet action. Heater will not operate.

240 VOLT OPERATION

MODE 1 Pump runs in LOW speed for filtration and Heater will operate as determined by thermostat setting.

MODE 2 Pump runs in HIGH speed for maximum hydrotherapy jet action and Heater will operate as determined by thermostat setting.

TEMPERATURE SETTINGS

35. With the equipment module operating in any of the heat modes, the thermostat will control the electric Heater. Initially, adjust the thermostat knob to the center of the HOT range. This setting will cause the water temperature to rise to 95 to 100 degrees F. Do NOT expect to feel hot water coming from the jets!

The length of time it takes the water to reach desired temperature depends upon several factors: water temperature at start, ambient air temperature, spa gallonage, relative humidity, type and insulative qualities of a cover and constancy of electric power applied. An insulative cover should be kept on the spa at all times it is not in use. Also, remember that prolonged use of the Air Blower and hydrotherapy jets when using the spa will have a significant cooling effect on the water.

UNDERWATER SPA LIGHT

36. The underwater spa light is located in the footwell area below the skimmer. A bright underwater light is produced with the low voltage system, ideal for illuminating the spa after dark. The light also makes the spa safer to use.

The switch that controls the light is on the AQUA-SET control panel on top of the spa.

37. If you wish, interchangeable colored lenses may be snapped on or off of the housing. These colored lenses may be installed or removed at any time, even if the spa is full of water.

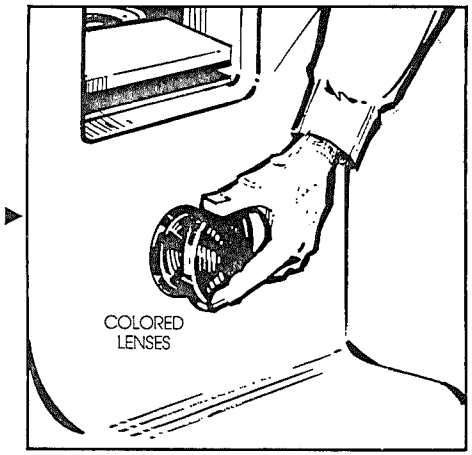

WATER CHEMISTRY GUIDELINES

38. When filling the spa with water, bring the water to the correct chemical balance by using the chemicals provided in the Tote available from your Amish Country spa dealer.

39. ***CAUTION:*** *It is essential that you shock chlorinate your spa after filling it with water BEFORE you begin to use it. Directions for shock or super chlorination are given on the chlorine concentrate container. This shock treatment will give an initial sterilization to your water, kill any algae spores that may be present and oxidize undesirable minerals and organic matter in the raw water.*

NOTE: *Calcium Hypochlorite is a type of chlorine which is used in swimming pools. We do not recommend it for spas. Sodium dichlorocyanurate (DyCloro) or lithium hypochlorite is recommended for spa use.*

This treatment should be repeated any time you refill the spa or whenever the water has lost its chemical control because of neglect or lack of use.

After initially shock chlorinating your spa it is important to balance the water for alkalinity and pH level for both a healthful spa as well as to protect the spa and its equipment. NEGLECT IN MAINTAINING THE CORRECT CHEMISTRY CAN VOID YOUR SPA WARRANTY.

Water characteristics and chemistry may vary from area to area. Therefore, ask your Amish Country spa dealer for guidance on how to best treat the water in your region.

If you fail to maintain the proper pH (between 7.2 and 7.6), eye burns, skin rashes and other discomforts as well as clogged pipes, staining and heater damage may occur.

It is recommended that alkalinity be maintained between 100-150 ppm (parts per million).

For information on water hardness in your area, ask your Amish Country spa dealer. He carries a complete line of chemicals to ensure optimum use and enjoyment from your new spa.

Chlorine content should not exceed 3 ppm, except occasionally during "super chlorinating." Super chlorination is used only to treat fresh water after completely draining the spa, and after periods of heavy use.

40. It is important that you read and follow the safety tips for chemical usage and storage listed here. This valuable information is contained on pages 11 and 12 of the "Sensible Way to Enjoy Your Spa or Hot Tub" issued by the *National Spa and Pool Institute* (NSPI) who have granted us permission to use this information here.

CHEMICAL SAFETY

The chemicals needed for your spa or hot tub help make it clean, disinfected and more attractive to use. But remember that these chemicals are potentially dangerous and may present some hazards if not used properly. Carefully follow the manufacturer's instructions for the use and storage of chemicals.

In general, here are some tips for chemical use and storage:

- Before using chemicals, read the labels and directions carefully. Follow label use instructions.
- Keep all chemicals out of the reach of children.

Storage

- Chemicals for test kits should be replaced each year.
- Keep the original lids on all chemical containers and make sure the lids are closed tightly when not in use.
- Do not stack different chemicals on top of one another.
- Store your spa or hot tub chemicals in a clean, cool, dry, well-ventilated area preferably off the floor, to prevent contamination from other materials. Keep them away from chemicals and equipment used for garden and lawn maintenance.
- Keep liquid chemicals away from dry chemicals. Keep apart chemicals which are different forms of oxidizing compounds. Physically separate all different forms of chemicals.
- Do not store your spa or hot tub chemicals where other flammable items may mix with them. For example, a mixture of these chemicals and fertilizer can cause a fire or explosion.

Usage

- Never mix two chemicals together. Use a clean scoop for each chemical, and avoid combining materials from "old" and "new" containers.

- Always add the chemicals directly to the spa or hot tub water, either in a suitable feeder, or distributed across the surface of the water or diluted and poured into the water. Follow label use instructions.
- When preparing water solutions for feeder application, pour the chemical slowly into the appropriate amount of water, stirring constantly to provide mixing and dilutions.
- Always add chemicals to water. Never add water to chemicals.
- Never add chemicals to the spa or hot tub water while people are using the facility.
- Carefully clean up any spilled chemicals with large amounts of water, to dilute and wash away the chemicals. Disinfectants and pH adjustment chemicals can usually be sent to the sewer with large quantities of water, since they are intended for use at low levels.
- Wash out empty disinfectant containers before disposing to eliminate danger of fire, explosion or poisoning.
- Test the water in your spa or hot tub with a reliable test kit on a schedule recommended by your spa or hot tub professional. Add the necessary chemicals according to the test results and the manufacturer's instructions. In the hot water environments of spas and hot tubs, disinfectants may rapidly break up and spread out, requiring more frequent water testing. Follow your manufacturer's instructions in this regard. The more people who use the facility, the more frequently you should test the water.
- Do not inhale dust or fumes from any chemicals. If necessary, use proper protective devices for breathing, handling and eye protection. Promptly wash off any residues which get on your skin.
- Never reuse old containers unless specified by the manufacturer.
- If you have any questions regarding safe handling, storage or use of spa or hot tub chemicals, contact the manufacturers.

ELECTRICAL REQUIREMENTS

41. Prior to startup, or performing any service, to the spa package turn OFF ALL primary electric power at the main circuit breaker of disconnect panel.

All field electrical connections can be made by removing the front cover of the electrical control box.

All electrical connections to this spa package must be accomplished by a qualified electrician in accordance with the National Electric Code or the Canadian Electric Code and in accordance with any local electrical codes in effect at the time of installation.

All connections should be made in accordance with the wiring tag enclosed in the electrical control box or the wiring diagrams within this manual.

These spa packages are designed to operate on 60Hz Alternating Current only, at a voltage of 120 to 240 volts as required.

Spa packages with a 120 volt rating require a two wire electrical service, plus ground (line 1, neutral and ground): spa packages with a 240 volt rating require a three wire electrical service, plus ground (line 1, line 2, neutral and ground).

Connections should be made using copper conductors only. The connecting wire and circuit breakers or fuses must all be sized to accommodate the Total Ampere load as specified on the equipment module data label.

A bonding lug has been provided on the equipment module to allow connection to local ground points (#4). To reduce the risk of electrical shock, at least #8 AWG solid copper bonding wire should be run from this lug to any metal ladders, water pipes or other metal within 5 feet of the spa.

120 VOLT INSTALLATION

42. Units to be operated at 120 volts must be connected to a properly wired 120 volt, 20 Amp receptacle.

Equipment modules installed for 120 volt operation, require a two-wire electrical service, plus ground (line 1, black), (neutral, white) and (ground, green). Refer to terminal block diagram.

Assure that all procedures on conversion have been followed (#44, 45, 46).

240 VOLT INSTALLATION

43. Units to be operated at 240 volts must have all electrical connections accomplished by a qualified electrician in accordance with the National Electric Code, the Canadian Electrical Code or other local electrical codes in effect at the time of installation.

Equipment modules installed for 240 volt operation require a three wire electrical service, plus ground (line 1, line 2, neutral and ground). Refer to terminal block diagram.

Assure that all the procedures on conversion have been followed (#44, 45, 46).

CONVERSION FROM 120V TO 240V

44. DISCONNECT ELECTRICAL POWER TO EQUIPMENT BEFORE ATTEMPTING CONVERSION.

The internal wiring in the control box must conform to the applied voltage at the equipment package as shown below:

120 VOLT WIRING

45. To wire the system for 120 volts, follow the wiring in the 120 volt terminal block diagram and install the plug as shown in the conversion plug diagram.

240 VOLT WIRING

46. To wire the system for 240 volts follow the wiring in the 240 volt terminal block diagram and install the plug as shown in the conversion plug diagram.

STARTING THE SPA

47. Be sure that the electrical power supply is off. On 120V systems, unplug the power cord and the SYSTEM switch on the front of the pack must be in the OFF position (#23).

On 240V systems, turn the circuit breaker in the residence electrical panel to the OFF position and turn the SYSTEM switch on the front of the pack to the OFF position (#23).

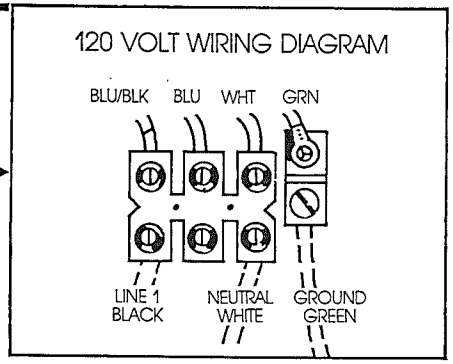

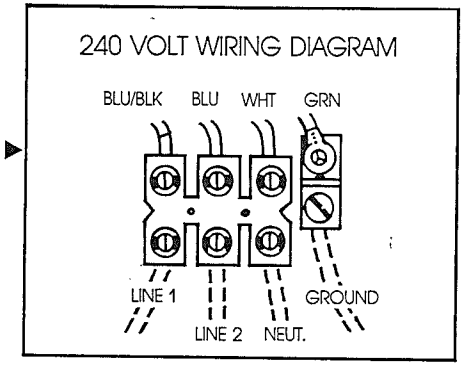

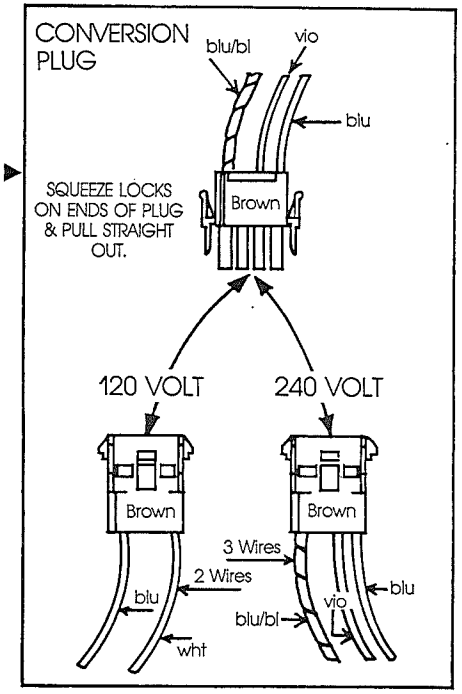

48. Check to see if the system is properly wired for 120V or 240V. (See illustrations here and wiring diagram in control box for additional instructions.) (#45 & #46)

- 120V – 240V plug moved to proper location (per wiring diagram).
- All wire connections are tight.

49. Tighten all disconnects, close the hose bib (#68), open both shut-off valves (#19). Remove all debris from the spa.

Fill the spa to the middle of the skimmer opening and shock chlorinate the water before entering and using the spa. It is essential that this shock treatment be done after each refill (#39).

50. BE SURE THAT THERMOSTAT IS IN THE "OFF" POSITION! (#32)

51. Turn on electrical power to the spa. On 120V systems, plug in the power cord. Close the Equipment Bay door.

HOW TO OPERATE CONTROLS

You are now ready to proceed with the operation of the spa as follows:

52. On 240V models be sure to turn ON power at main breaker switch. On 120V models, plug in power cord. Reminder: as outlined in Step #11, *do not* use an extension cord; plug spa power cord directly into an outlet. Step #6.

53. Set the two Timer switches (at the spa pack) to CONTINUOUS OPERATION. Step #24.

54. Be sure THERMOSTAT (top left of AQUA-SET control panel on top of spa) is OFF.

This is to make sure that water is flowing through the system before activating the heater to prevent possible heater damage.

The READY light will turn ON (because the thermostat is OFF and not calling for heat).

55. Now, turn ON the main power switch at the spa pack. Step #23.

At this point, the spa will be operating in one of four modes (all explained below), based upon the last mode at which the spa was tested at the factory. You want Low Speed, jets only, at this point. See Step #56.

56. Push FUNCTION button (on AQUA-SET control panel on top of spa) until ONLY THE *READY* LIGHT is lit.

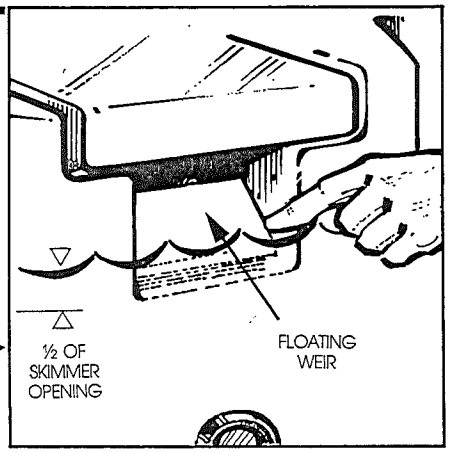

This is the first mode. The jets (ie. pump) are operating at low speed, no heat is on, no air bubbles are on.

Make sure that water is flowing through the jets, by sight or by feeling the flow of water with your hands.

If water is flowing through the jets, allow the spa to circulate for 4-5 minutes to discharge air from the plumbing system. After a full flow of water has been obtained from all the jets, go to Step #57.

NOTE: Your Amish Country spa has been filled, test-run and drained at the factory. While the hose bib has been left open to drain as much residual water as possible, the first time your spa is filled, some slight discoloration may appear. This discoloration will disappear when the spa is completely filled and the filtration system activated.

If water is not flowing through the jets, turn OFF the power switch at the spa pack (Step #23) and call your Amish Country dealer for assistance.

57. Turn ON Thermostat (dial at top left of AQUA SET control panel on top of spa) by turning from OFF, in a clockwise rotation, to the desired heat setting. We suggest somewhere midway between WARM and HOT. Use a spa thermometer to check temperature, making sure that, in no case, does the water temperature exceed 104 F. See Safety Precautions, Page 2.

The READY light will go out and the HEATER light will now turn on (indicating the heater is now ON).

At this point, your spa will have low speed jet action with the heater function. Your spa will continue to operate like this until you set and activate the Timers (Step #24).

Additional operating modes are as follows:

58. Touch the FUNCTION switch again and high speed jet action (ie. pump) will occur.

The JET light is ON.

The BLOWER light is ON.

Your spa will now be delivering high speed jet action with bubbles coming up through the "holes" positioned around the bottom of the spa.

59. Touch the FUNCTION switch again and you turn off the bubbling action.

The JET light is ON.

The BLOWER light is OFF.

Your spa will now deliver high speed jet action without the bubbling effect.

60. Touch the FUNCTION switch again and your spa will now deliver bubbles only.

The JET light is OFF.

The BLOWER light is ON.

The HEATER light is OFF (because the heater will be automatically turned OFF since there is no jet action or flow through the pump, which is required for safe heater operation).

In this mode, your spa delivers air action only.

61. Touch the FUNCTION switch again and you return the spa to the starting mode, described in Step #56.

Note: Remember that the spa must be in one of the jet modes, with the JET light ON, in order to allow heater operation. Also, if 120 volt spa, heater will not operate at HIGH speed.

62. Retest the water for the proper chemical balance and adjust as necessary (#38, 39, 40). PROPER BALANCE IS IMPORTANT.

63. For longer pump life, more efficient heating and lower operating cost, we recommend the filtering bypass switch (#27) be left on "CONTINUOUS OPERATION". There is less wear on the equipment when it is run at longer periods rather than short intervals.

An unused spa should circulate for at least four (4) hours per day to maintain proper filtration and water temperature. More frequent use of your spa and cooler air temperatures will require longer circulation times.

HARD COVER

64. When the spa is not in use, the Amish Country Hard Cover and the floating thermal cover should be kept on the spa to retain the water's heat and to keep out dirt, dust, etc. Your preset heater thermostat will maintain a constant water temperature between spa uses for a very low cost per day.

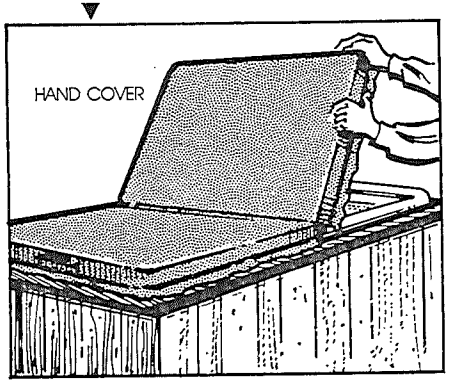

FREEZE PROTECTION

65. Your Amish Country spa has several features that allow you to choose the degree of freeze protection most appropriate for your particular spa environment. If the spa is not going to be fully drained and winterized (#75), then maximum freeze protection is obtained by the following:

- Set filtering bypass switch (#27) on CONTINUOUS mode.
- Set heating bypass switch (#29) on THERMOSTAT CONTROL mode.
- Set thermostat (#32) on the FREEZE setting (or higher).

This results in a continuous circulation of the spa water with the heater automatically maintaining a water temperature of approximately 50° F.

A lesser degree of freeze protection can be obtained by using the filtering and heating timeclocks with the bypass switches in the timeclock position (#26, 28). Regardless of the extent of freeze protection required, always leave the thermostat set on the FREEZE position (or higher) and where possible, leave the spa in continuous operation and thermostat control.

REGULAR MAINTENANCE

CEDAR SKIRTING

66. The solid cedar wood skirt has been treated at the factory with a Teak Oil sealant. We suggest that you apply an additional coat of Teak Oil (available at most paint stores) or any quality wood preservative about twice a year to protect your skirting from the weather.

DRAINING YOUR SPA

67. Your spa should be drained and refilled AT LEAST four times a year. Unless draining is performed on a regular basis, the water can become chemically saturated and will not respond to normal chemical treatments. Depending upon spa usage, more frequent draining may be necessary.

Your spa should also be drained if you anticipate a long period of non-use or when performing repairs on the spa system.

Note: Prolonged direct sunlight on the acrylic surface may cause severe damage or create blemishes on the spa shell, voiding any surface warranty. Therefore, always cover an empty spa.

The small volume of water in a spa often makes it simpler and less costly to drain and refill the spa than to attempt to adjust water chemistry with additives.

Any public spa should be drained and refilled AT LEAST once a month or more frequently.

68. To drain your spa:

(1) Turn the thermostat dial to OFF (top of spa) #32.

(2) Turn the system switch to OFF (spa pack) #23.

(3) Unplug a 120v spa; turn the main breaker switch to OFF on a 240v spa.

(4) Use a garden hose and attach it to the bib located to the left of the spa pack.

(5) Open the bib by turning counterclockwise. Gravity will cause the water to drain out the hose.

(6) Close the hose bib and remove the hose once the spa is fully drained.

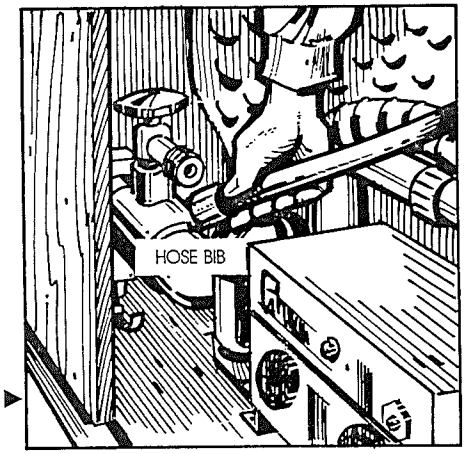

CLEANING YOUR SPA

69. Use a soft cloth or sponge to wipe the tile, or water line area, should it become soiled. Abrasive cleaners SHOULD NOT be used as they can dull or scratch the tiles or acrylic surface. See "Spa Maintenance Schedule" (#78) for additional recommendations on cleaning.

70. The Amish Country spa hard cover may be washed with soap and water or any NON-ABRASIVE household cleanser. Any quality NON-SILICONE vinyl restorer may be used to help protect the cover from the sunlight.

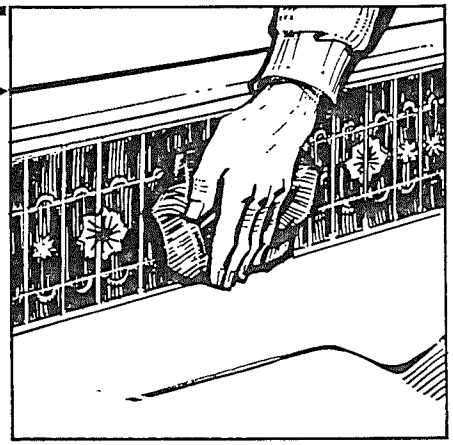

REMOVING THE FILTER CARTRIDGE

71. Please see "Spa Maintenance Schedule" (#78) for a recommended cleaning frequency to help extend the life of the cartridge.

To clean the cartridge:

(1) Lift off the skimmer lid.

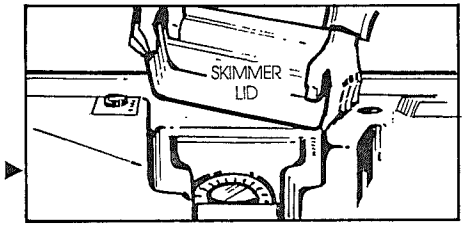

(2) Twist the skimmer basket counter-clockwise and lift out.

(3) Reach down and lift out the filter cartridge. Note: the LARGE HOLE in the cartridge ALWAYS FACES DOWN.

(4) Clean or replace the cartridge. For cleaning procedures, see #72 and #78.

(5) Replace the filter (with large hole DOWN), replace skimmer basket and replace skimmer lid.

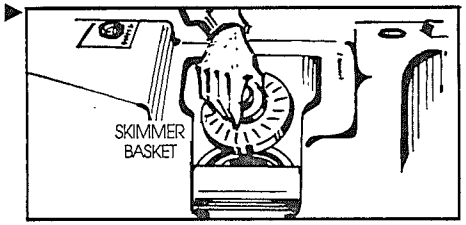

CLEANING THE FILTER CARTRIDGE

72. We recommend that the filter cartridge be removed and thoroughly rinsed with a high pressure hose on a weekly basis. Due to body oils and suntan lotions, it will be necessary to occasionally soak the filter cartridge in cartridge cleaner. (See your Amish Country spa dealer for a suitable cleaner.)

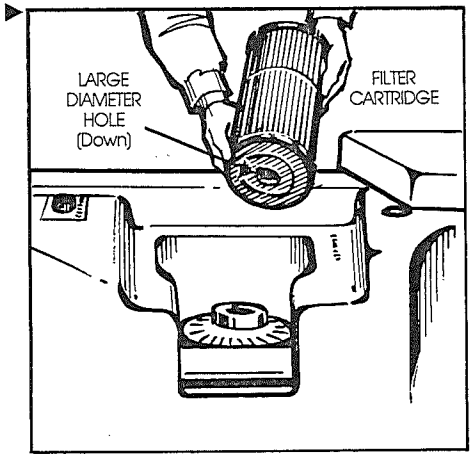

REFILLING THE SPA

73. Refill your spa with fresh water, using a garden hose (see #47), test the water and add any necessary chemicals (#15, 38, 39, 40).

Remember that, anytime you refill the spa, it is necessary to shock chlorinate before entering and using the spa. Simply follow the procedures outlined in "Starting Your Spa" (#47 to #51).

And, re-read #40 for Chemical Safety rules.

REPLACING SPA LIGHT BULB

74. Open the access door to the spa pack.

We suggest you turn the power switch to OFF (#23).

Locate the spa light on the spa shell, behind and above the spa pack.

Remove the lamp socket from the rear of the light assembly; turn to the right and pull off. Gently remove the bulb and take to your Amish Country spa dealer to obtain a replacement bulb.

Install new bulb, re-install lamp socket into the light assembly, turn power switch to ON and close access door to the spa pack.

WINTERIZING

75. The Amish Country spa is designed for year-round use, even in outdoor conditions. However, should you decide to shut-off your spa during the winter months (or for any other prolonged time period), please follow the guidelines below:

(1) Turn thermostat (top of spa) to OFF (#32).

(2) Turn main power switch (spa pack) to OFF (#23).

(3) On 120v spas, unplug power cord; on 240v spas, turn main electrical breaker switch to OFF.

(4) Drain spa with garden hose (#67 and #68).

(5) Leave hose bib in OPEN position (#68).

(6) Remove any remaining water (from seats, footwell area, etc.) If necessary, use a plastic bucket to bail out water and dry with towels. A wet/dry vacuum cleaner may also be used.

(7) Wipe out the spa, including the tile or border area.

(8) Take out, clean, and re-install the filter cartridge (#71). Dry cartridge before re-installing.

(9) Cover the spa with your Amish Country hard cover.

For outdoor spas, we suggest you contact your Amish Country spa dealer for instructions on protecting any below-ground water piping.

Note: A special spa anti-freeze is available from your Amish Country spa dealer. Contact your dealer regarding proper use and follow all instructions on the container label.

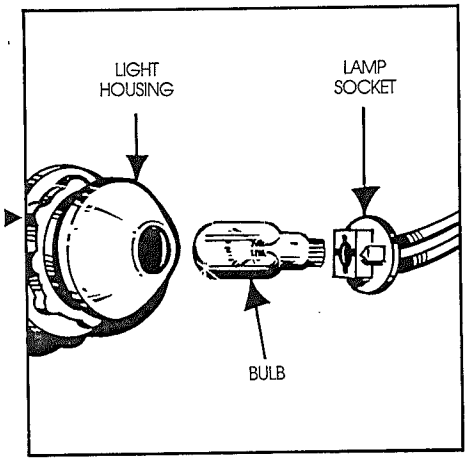

OUTDOOR WINTERTIME SPA USE

76. If you plan to use your spa over the winter months and plan to keep water in the spa, your Amish Country spa has a special non-freeze position on the thermostat (on top of spa).

(1) Set filtering bypass switch to CONTINUOUS OPERATION (#27) located on spa pack.

(2) Set heater bypass switch, located on spa pack, to THERMOSTAT CONTROL (#29).

(3) Set thermostat (top of spa) #32 to FREEZE. This will maintain water temperature at 50° F.

Check the spa periodically to make sure water level is at the half-way point on the skimmer.

Before using spa, make sure that the water is chemically sanitary (#15, 38, 39 and 40).

SPA MAINTENANCE

Suggested schedule

77. On a Daily Basis –

(a) Add water to proper level by filling up to 1/2 the skimmer opening. Clean and check skimmer basket.
(b) Check the pH and add chemicals to water if needed.
(c) Check disinfectant level and add chemicals required.
(d) Circulate water for at least four hours each day to allow for effective filtration.

78. On a Weekly Basis –

(a) Wipe the edge of the spa at the water line (#69).
(b) Remove and clean the filter cartridge. Spray thoroughly with a garden hose with a high pressure nozzle. (#71 & #72)
(c) Clean the floating weir inside the skimmer.

79. On a Monthly Basis –

(a) Remove and place the filter in filter cartridge cleaner and allow to soak. Then, rinse thoroughly with clear water (#71 & #72).
(b) Test the GFCI unit (#8).
(c) Wipe the spa cover.

80. About Every Three Months –

(a) Drain the spa, wipe it clean and refill with fresh water. (#67 & #68). Replenish all chemicals (#15, 38, 39 & 40).
NOTE: Never wax your spa's surface. Wax can dissolve in water and may clog the filter.
(b) The cedar skirting was treated and sealed at the factory. To maintain its appearance, you may wish to seal or stain it once a year with a Teak Oil or an exterior-grade sealant. This is especially important if your spa is located outdoors.

TROUBLESHOOTING

PLEASE NOTE: The following corrective actions may be performed by the spa owner. If the trouble cannot be corrected in the steps below, please refer to your Amish Country Dealer for service. (Improper servicing by an unauthorized serviceman or spa owner could result in damage that will not be covered by the warranty or could cause serious injury.)

SYMPTOMS	SUGGESTED ACTION
Equipment will not operate	Make sure the equipment spa pack door is completely closed (#16). Be sure the power cord is plugged in (120v operation) (#6). Check the circuit breaker on the control box panel or in the main circuit panel (#22). Check the MAIN POWER switch (on spa pack). It should be ON (#23). Check the FILTERING time clock switch for the CONTINUOUS OPERATION position (#25). Test the GFCI to see if it has "tripped" (#8). IMPORTANT: If the GFCI trips repeatedly, do not use the spa, and contact your Amish Country Dealer for assistance.
Pump does not work (in low speed circulation)	Be sure spa pack access door is closed (#16). Be sure the shut-off valves are completely open (#19). Flip the FILTERING time clock switch to CONTINUOUS OPERATION (#27). Check for obstructions or restrictions at the main drain and catch basket (#71). Check the filter cartridge for dirt and debris. Clean or replace (#71).
Pump does not work (in high speed circulation)	Push the FUNCTION BUTTON on the spa AQUA SET Control (top of spa) (#32). Check items in "Pump does not work (in low speed circulation)" above.
Inadequate jet action	Open the adjustable hydrojets (#31). Check the spa water level; water must be 1/2 the depth of the skimmer opening (#49). Be sure the shut-off valves are completely open (#19). Check that the air control valves are open (#30). The filter cartridge may be clogged. Remove the cartridge from the cannister (#71). If the jet action improves, clean or replace the filter.
No heat	Check all steps above in "Equipment does not operate." Check the High-Limit Control switch in the equipment bay. Push to reset (#20, 21). Check that the thermostat dial is set to the desired setting (#32). Turn the HEATING time clock switch to THERMOSTAT CONTROL (#28). Note: Do not expect instant hot water from the jets. It will take the heater several hours to heat the spa to the temperature you desire. Inspect the filter cartridge for dirt and debris (#71). Prolonged use of the air blower and jets will have a significant cooling effect on the water. Turn off both the blower and the jet action to allow the heater to raise the spa temperature (#32). Remember: On 120v installations, the heater operates only when the pump is on low speed.

Underwater spa light does not work

Push the button marked LIGHT on the AQUA-SET Control (#36).

Tighten the light bulb in the socket (#74).

Replace the light bulb (#74).

Water is cloudy

Check the water chemistry and balance as needed (#38, 39, 40).

Clean or replace the filter cartridge (#71).

Air blower does not work

Push the button marked FUNCTION on the Spa AQUA-SET Control until Blower light is ON (#32).

Check all steps above in "Equipment does not operate."

AMISH COUNTRY SPA SUPPORT SYSTEM (SPA PACK)

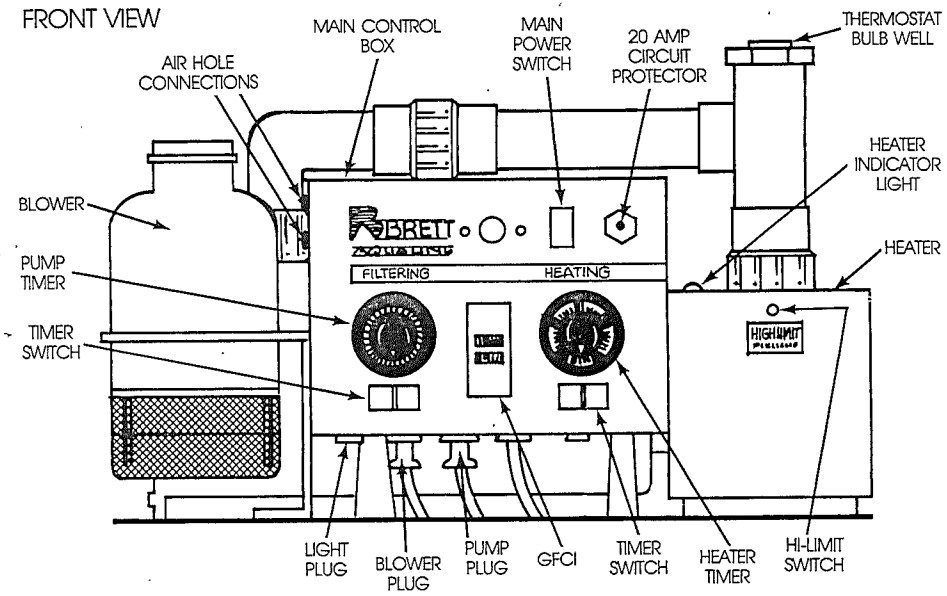

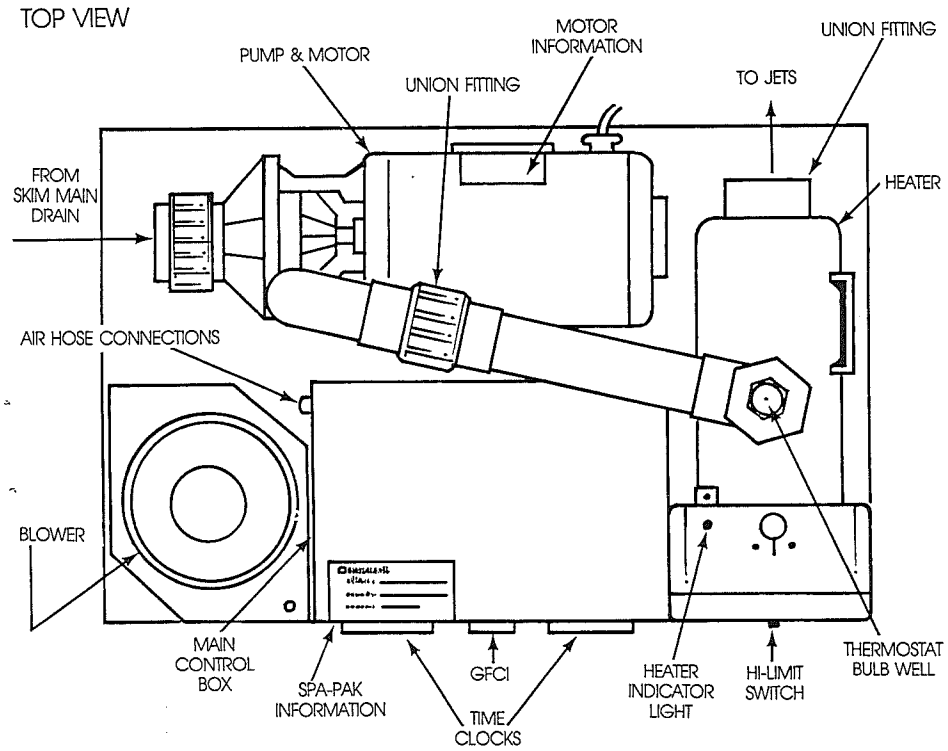

NOTES

NOTES